PL9120

Stainless Steel, Hermetically Sealed, IP69

Order Information

Picture is a representation of actual product

Load Rating	Part #	Est. Weight	Price
Static 500 kg	**205775**	6 lb	Consult

Specifications

Full Scale Output:
2.0 mV/V

Output Resistance:
350 (nominal)

Input Resistance:
385 (nominal)

Material/Finish:
Stainless steel

Temperature:
14° F to 104° F (-10° C to 40° C)

Rated Excitation:
5-15 VDC

Non-linearity:
±0.03% full scale

Insulation Resistance:
5 mega ohms at 50 VDC

Seal Type:
Hermetically sealed, IP69

Cable Length:
25 ft

Wire Color Code:
Red - Excitation +
Green - Signal +
Black - Excitation -
White - Signal -
Yellow - Shield

Warranty:
One-year limited warranty

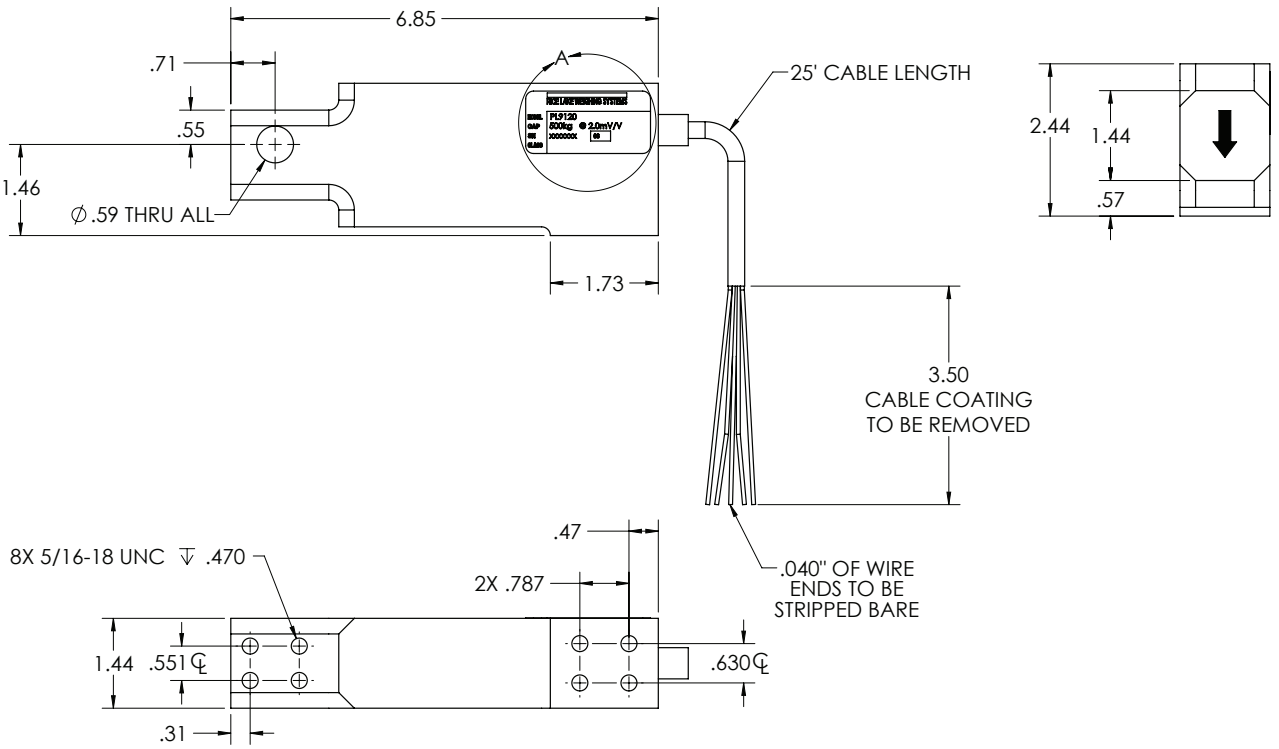

An ISO 9001:2015 Accredited Company ©2025 Rice Lake Weighing Systems 1/25 Prices and specifications subject to change without notice. Visit ricelake.com for current prices.